ELSEVIER

Journal of Organometallic Chemistry 547 (1997) 235–242

Journal of Organometallic Chemistry

Monoarsenic, diarsenic and mixed phosphorus–arsenic substituted niobocenes

Georgii I. Nikonov [a,*], Alexander J. Blake [b], Jörg Lorberth [c], Dmitry A. Lemenovskii [a], S. Wocadlo [c]

[a] *Chemistry Department, Moscow State University, Vorob'evy Gory, 119899, Moscow, Russia*
[b] *Chemistry Department, University of Nottingham, University Park, Nottingham, UK*
[c] *Fachbereich Chemie, Philipps-Universitat, Marburg, Hans-Meerwein-Strasse, D-35032, Germany*

Received 28 February 1997

Abstract

Arsenic monobromides $BrAsR_2$ (R = Me, Et) insert easily into the Nb–H bond of $[Cp_2NbH_3]$ affording the ionic complexes $[Cp_2NbH_2(HAsR_2)]Br$ (R = Et (**1a**), Me (**1b**)). Deprotonation of **1a** produces the dihydridarsenido derivative $[Cp_2NbH_2(AsEt_2)]$ (**2a**) cleanly and in high yield (93%), whereas deprotonation of **1b** gives the expected $[Cp_2NbH_2(AsMe_2)]$ (**2b**) together with a considerable amount of $[Cp_2NbH_3]$. Reaction of $(AsEt_2)_2$ with $[Cp_2NbBH_4]$ in the presence of NEt_3 results in the formation of complexes $[Cp_2Nb(HAsEt_2)(BH_3AsEt_2)]$ (**6**) and $[Cp_2NbH_2(BH_3AsEt_2)]$ (**7**). It was found that NEt_3 is a catalyst of this reaction. The orange complex $[Cp_2Nb(HAsEt_2)(HP^{i-}Pr_2)]Br$ (**9**) was prepared by the reaction of $BrAsEt_2$ with $[Cp_2NbH(HP^{i-}Pr_2)]$. Deprotonation of **9** affords the phosphinoarsenido complex $[Cp_2Nb(AsEt_2)(HPPr_2^{-i})]$ (**10**). The molecular structure of **6** was found from an X-ray structure determination. © 1997 Elsevier Science S.A.

Keywords: Niobium; Arsenic; Phosphorus; Hydrides; Insertion reaction

1. Introduction

The organoarsenic substituted transition metal complexes have a rich and diverse chemistry. Thus arsenic clusters [1–3], arsenido $[L_nM\text{-}AsR_2]$ compounds [4–15], complexes with an arsenic-metal double bond $[L_nM = AsR_2]$ [16,17] and others [18] were studied. In the early transition metal metallocene chemistry some arsenidometallocycles $[Cp_2M(\text{-}AsR\text{-})_n]$ were prepared [19,20]. In contrast, metallocenes substituted by a terminal arsenido group became available only recently and are much less studied than their phosphorus analogues [13–15]. The usual synthetic strategy to prepare arsenic substituted metallocenes is by the activation of the As–As bond in $(AsR)_n$ [3,20] or by metathetical reactions [13–15]. We have recently shown that the insertion of group 5 halogenides into the M–H bond is an alternative for the synthesis of main-group element substituted complexes [21–25]. Application of this approach to the synthesis of the first arsenido substituted niobocene has been briefly reported [26].

Here we present an extension of these studies to the mono- and diarsenic substituted niobocenes, including one containing both phosphorus and arsenic substituents.

2. Results

2.1. Monoarsenic substituted complexes

Arsenido-substituted metallocenes are known only in the chemistry of zircono- and hafnocenes $[Cp_2Zr(AsPh_2)_2]$, $[Cp_2Zr(As(SiMe_3)_2)_2]$, $[Cp'_2HfCl(As(SiMe_3)_2)]$ and were prepared by metathetical reactions from the corresponding dichlorides $[Cp_2MCl_2]$ [13–15]. The easiest route to monoarsenic substituted niobocenes is the reaction between the arsenic monohalogenides and $[Cp_2NbH_3]$. Arsenic monobromides $BrAsR_2$ (R = Me, Et) insert easily into the Nb–H bond of $[Cp_2NbH_3]$ affording the ionic com-

* Corresponding author.

0022-328X/97/$17.00 © 1997 Elsevier Science S.A. All rights reserved.
PII S0022-328X(97)00307-0

plexes $[Cp_2NbH_2(HAsR_2)]Br$ (R = Et (**1a**), Me (**1b**)) (Scheme 1). Complexes **1a,b** are poorly soluble in nonpolar solvents and precipitate from the reaction mixture in pure form. Their structures were established by NMR and IR spectroscopy. Deprotonation of **1a** by $NaN(SiMe_3)_2$ produces the dihydridarsenido derivative $[Cp_2NbH_2(AsEt_2)]$ (**2a**) cleanly and in high yield (93%). In contrast, deprotonation of **1b** by aqueous NaOH, $NaN(SiMe_3)_2$ or NEt_3 gives 1:1 mixture of the expected $[Cp_2NbH_2(AsMe_2)]$ (**2b**) with $[Cp_2NbH_3]$ (Scheme 1). Formation of $[Cp_2NbH_3]$ is consistent with nucleophilic attack of the base on the arsenic atom in **1b** rather than on the As–H bond. However, the use of the non-nucleophilic base DBU (diazobicycloundecene) also gave the same product mixture. The only possible explanation of this result is that the complex formed, $[Cp_2NbH_2(AsMe_2)]$, having a highly nucleophilic arsenido center, attacks the arsenic atom in the starting complex **1b** to give $[Cp_2NbH_3]$. The fate of the arsenic product of this reaction remains so far unknown. Apparently, for **1a** this process is not possible for steric reasons.

The structures of arsenido complexes **2a,b** were established by NMR and IR spectroscopy. The ^1H NMR spectra of these compounds display well defined sets of signals for Cp, AsR_2 and hydride ligands. For **2a** this formulation was also confirmed by an X-ray structure determination [26].

In the corresponding phosphorus chemistry we established that heating of the complexes $[Cp_2NbH_2(HPR_2)]Cl$ selectively gives phosphinochlorides $Cp_2Nb(HPR_2)Cl$ [24]. In contrast, the heating of **1a,b** even at moderate temperatures (50°C) results only in intractable reaction mixtures.

2.2. Diarsenic substituted complexes

Phosphorus complexes of the type $[Cp_2NbH(HPR_2)]$ react easily with $ClPR_2$ to give ionic complexes $[Cp_2Nb(HPR_2)_2]Cl$ which can be deprotonated, affording $[Cp_2Nb(HPR_2)PR_2]$. It was highly desirable to develop easy ways to the related diarsenic complexes $[Cp_2Nb(HAsR_2)_2]Br$ (**3**) and $[Cp_2Nb(HAsR_2)AsR_2]$ (**4**). The latter compound is interesting because it could also exist in an isomeric form, $[Cp_2Nb(AsR_2)_2H]$ (**4′**). To elucidate this question the synthesis of diarsenic substituted niobocenes was undertaken. However, reaction of **2a** with $BrAsEt_2$ does not give the desired insertion product **3** but the nucleophilic substitution product $[Cp_2NbH_2(AsEt_2AsEt_2)]Br$ (**5**) (Scheme 2). Attempted deprotonation of **5** by $NaN(SiMe_3)_2$ failed since only the starting complex **2a** was isolated in high yield, consistent with the nucleophilic attack of $NaN(SiMe_3)_2$ on the weak As–As bond. The use of the non-nucleophilic base DBU resulted in no reaction. The action of two equivalents of BuLi on **5** gave a new complex for which the NMR spectra in THF-d_8 displayed signals for only one hydride (^1H NMR: −9.14 ppm) and one $AsEt_2$ ligand. This complex is insoluble in aliphatic and aromatic solvents but is soluble in THF. We tentatively formulate this material as the lithium salt $[Cp_2NbH(AsEt_2)]Li$. However, purification of this complex was hampered by its inappropriate solubility properties and its further characterization was not pursued. No reaction was observed between **5** and ^tBuLi.

An alternative method to make diarsenic complexes is the oxidative addition of the As–As bond to a metal center. Thus, the titanium trisarsanato complex $[Cp_2Ti(AsPh)_3]$ was prepared by the reaction of $(AsPh)_6$ with the in situ generated $[Cp_2Ti]$ [20]. The niobium diarsinidene complexes $[Cp_2NbH(AsR)_2]$ (R-methyl, phenyl, tolyl) were prepared by an analogous reaction of cyclo-polyarsines with $[Cp_2NbH_3]$ in refluxing benzene [2]. With the intention of preparing complex **4** or **4′** we studied the reaction of Cp_2NbH_3 with diarsane $(AsEt_2)_2$. However, heating of the mixture of $[Cp_2NbH_3]$ and $(AsEt_2)_2$ at 60°C in THF resulted in the formation of $[Cp_2NbH_2(AsEt_2)]$ (**2a**) as the main product. The reaction mixture also contained substantial amounts of two other cyclopentadienyl compounds

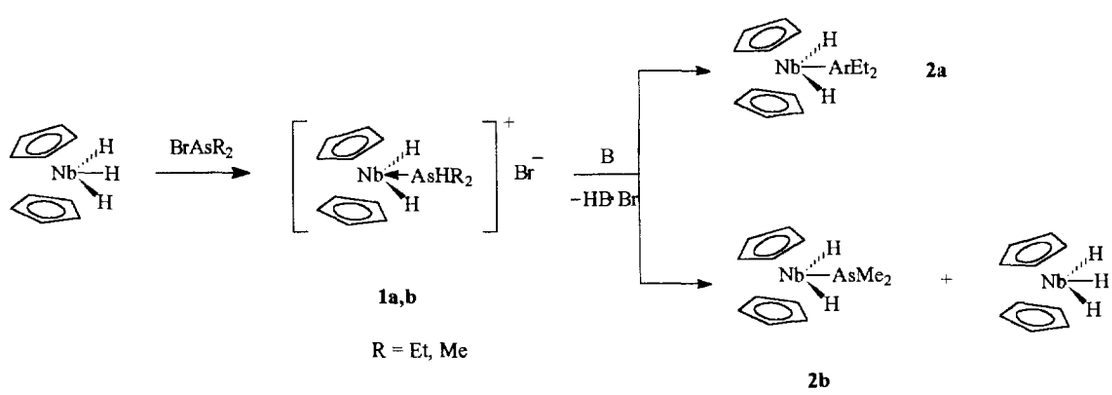

Scheme 1.

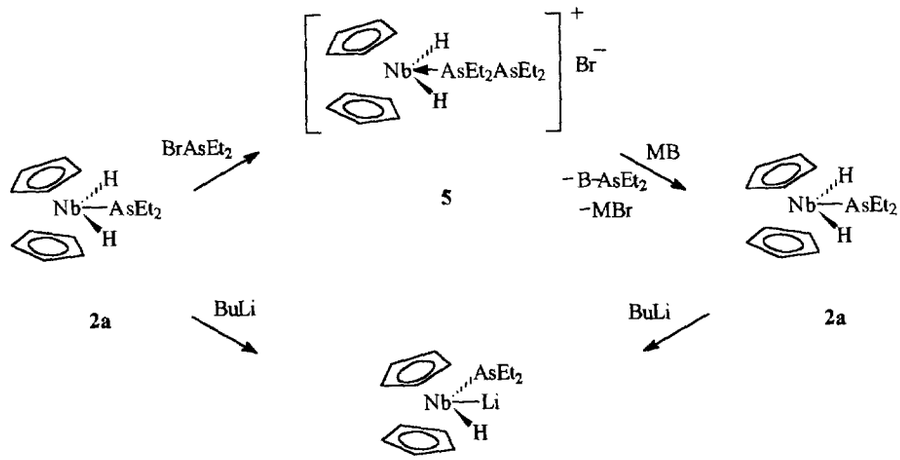

Scheme 2.

(singlets at 4.49 (**8**) and 4.20 ppm in the ^{1}H NMR spectrum) and some other compounds in low concentration. These complexes displayed no signals for the hydride ligands and thus, in principle, one of them could be the desired complex **4**. We also found that exactly the same reaction mixture emerges after thermolysis of **2a**.

To circumvent problems associated with the possible thermal instability of **4**, the oxidative addition of $(AsEt_2)_2$ was performed under milder conditions. The system $[Cp_2NbBH_4]/NEt_3$ is believed to generate the transient monohydride $[Cp_2NbH]$ at room temperature [27]. Addition of $(AsEt_2)_2$ to the mixture of $[Cp_2NbBH_4]$ and NEt_3 results in the formation of two main products, the complexes $[Cp_2Nb(HAsEt_2)(BH_3AsEt_2)]$ (**6**) and $[Cp_2NbH_2(BH_3AsEt_2)]$ (**7**). Small amounts of complexes **2a** and **8** were also observed. A mixture of two compounds, **6** and **7**, was obtained after recrystallization from cold diethyl ether solution. Complex **7** crystallizes in the form of small yellow crystals whereas **6** gives large red crystals, allowing the manual separation of **6** from **7**, so that compound **6** was obtained in a pure form while compound **7** was inevitably contaminated by **6**. The structures of **6** and **7** were established by NMR, IR and mass-spectroscopy. Complex **7** is an adduct of complex **2a** with BH_3 and its spectral features are similar to those of **2a**. In the ^{1}H NMR spectrum complex **7** gives rise to the singlet for the cyclopentadienyl rings at 4.80 ppm and the hydride signal at -2.33 ppm. The low-field shifts of these signals from the corresponding signals for **2a** ($\Delta\delta_{Cp} = 0.05$ ppm and $\Delta\delta_H = 0.08$ ppm) is explained by the coordination of BH_3 to the arsenic lone pair. The ^{1}H NMR spectrum of **6** displays the cyclopentadienyl ring singlet at 4.46 ppm, the multiplets for $AsEt_2$ groups and the BH_3 signal at 1.64 ppm. The position of the BH_3 group signal was determined by a selective decoupling experiment. The position of the arsenic bound proton (As–H) coupled to the quadrupolar ^{75}As nucleus (nucleus spin 3/2) was not assigned. However, the presence of the As–H bond is confirmed by the band at 2093 cm^{-1} in the IR spectrum. The ^{11}B NMR spectrum of **6** displays a signal at -31.5 ppm typical of a boron compound of the type $L \rightarrow BH_3$ [10,11,28]. The ^{13}C NMR spectrum of **6** confirms the presence of two nonequivalent $AsEt_2$ groups.

Complex **6** is an adduct of **4** with BH_3. Formation of **6** can be rationalized in terms of oxidative addition of Et_2As-$AsEt_2$ to $[Cp_2NbH]$ formed by the action of NEt_3 on $[Cp_2NbBH_4]$ and further coordination of the BH_3 group to the nucleophilic arsenido center (Scheme 3). Thus the stoichiometry of this transformation does not require the presence of NEt_3. However, when trieth-

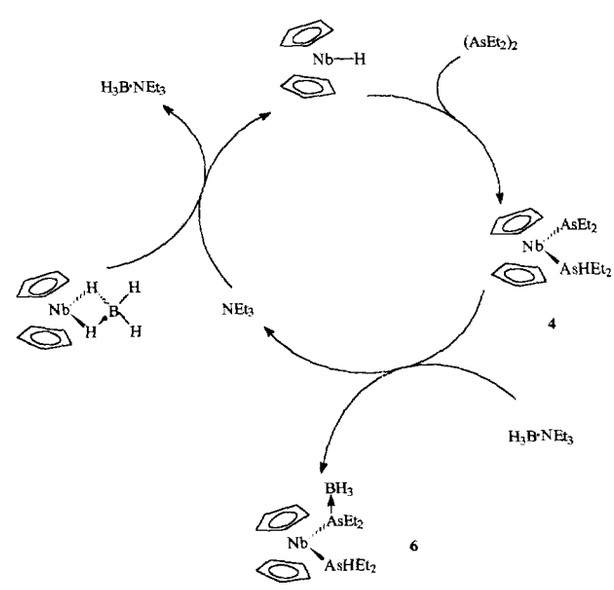

Scheme 3.

ylamine is not added to the mixture of $[Cp_2NbBH_4]$ and $(AsEt_2)_2$ only a slow decomposition towards unidentified products occurs. Therefore, NEt_3 is a catalyst of the reaction of Cp_2NbBH_4 with $(AsEt_2)_2$. The use of PPh_3 instead of NEt_3 also results in the formation of **6** and **7** but the main product is $[Cp_2NbH(PPh_3)]$. Apparently, PPh_3 effectively competes with $(AsEt_2)_2$ for the coordinatively unsaturated $[Cp_2NbH]$. The route of formation of **2a** and **7** is less clear. One possibility is that complex **2a** is formed from **6** by the elimination of $H_2B\text{-}AsEt_2$.

The X-ray diffraction analysis of **6** was undertaken in order to elucidate the structure of this compound. The result allows us to reject unequivocally the alternative formulation of **6** as $[Cp_2Nb(AsEt_2)(HAsEt_2) \rightarrow BH_3]$, i.e., as an adduct of BH_3 to the niobium lone pair of the d^2 basic niobocene $[Cp_2NbLX]$ ($L = HAsEt_2$, $X = AsEt_2$). Complex **6** crystallizes in the space group *P*-1 with two independent molecules per asymmetric unit. The structure of one of them is shown in Fig. 1 and some selected bond lengths and angles are listed in Table 1. The structure of **6** is interesting in that it is the first structurally characterized example of the arsenido complex with the $AsR_2 \rightarrow BH_3$ group and only the second example of a complex with the $HAsR_2$ ligand. Only five other arsenido derivatives, including **2a**, have been structurally characterized [5–7,14,15,26]. The Nb–As bond lengths in **6** are 2.621(3) Å for the arsino group $HAsEt_2$ and 2.674(3) Å for the arsinidoborane group $AsEt_2 \rightarrow BH_3$. These bonds are considerably shorter then the normal niobium-arsenido bond of 2.720(1) Å found in **2a**. [26] Thus, coordination of the BH_3 group to arsenic strongly decreases the Nb–$AsEt_2$ distance, apparently due to the increase of arsenic *s*-orbital character in the Nb–As bond. It is interesting that the Nb–As bonds in the diarsinidene complex $[Cp_2NbH(AsTol\text{-}AsTol)]$ (2.754 (1) Å) [2] are even longer than that in **2a**. Thus increasing substitution at the arsenic atom results in the decrease of the arsenic-metal bond length. The As–H bond at 1.5(2) Å is close

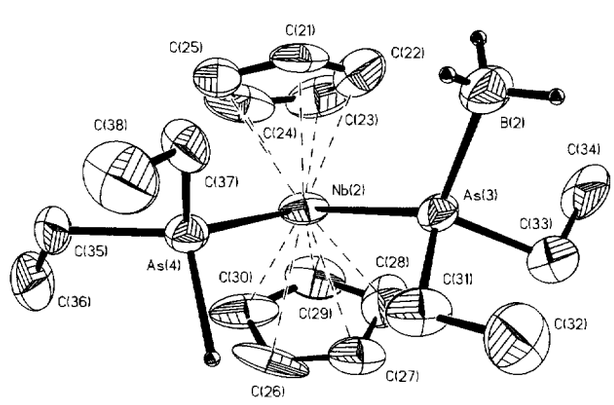

Fig. 1. Molecular structure of **6**. The hydrogen atoms at Cp and Et groups are omitted for clarity.

Table 1
Selected bond lengths [Å] and angles [°] for **6**

Nb(1)-As(1)	2.674(3)
Nb(1)-As(2)	2.621(3)
As(1)-B(1)	2.07(2)
As(1)-C(11)	2.00(2)
As(1)-C(13)	1.97(2)
As(2)-C(15)	1.97(2)
As(2)-C(17)	1.98(3)
As(2)-H'A	1.5(2)
Nb(2)-As(3)	2.686(3)
Nb(2)-As(4)	2.634(3)
As(3)-B(2)	2.07(2)
As(3)-C(31)	2.02(2)
As(3)-C(33)	1.99(2)
As(4)-C(35)	1.96(2)
As(4)-C(37)	1.96(2)
As(4)-H'B	1.8(2)
As(1)-Nb(1)-As(2)	85.38(8)
B(1)-As(1)-Nb(1)	122.2(6)
C(11)-As(1)-Nb(1)	113.5(5)
C(11)-As(1)-B(1)	102.5(9)
C(11)-As(1)-C(13)	100.9(7)
C(13)-As(1)-B(1)	102.8(9)
C(13)-As(1)-Nb(1)	112.3(6)
C(15)-As(2)-C(17)	96.5(12)
C(15)-As(2)-Nb(1)	117.2(7)
C(17)-As(2)-Nb(1)	123.2(9)
H'A-As(2)-C(15)	109(6)
H'A-As(2)-C(17)	90(7)
H'A-As(2)-Nb(1)	117(6)
As(4)-Nb(2)-As(3)	84.91(8)
B(2)-As(3)-Nb(2)	122.1(6)
C(31)-As(3)-Nb(2)	112.8(6)
C(31)-As(3)-B(2)	104.2(10)
C(33)-As(3)-Nb(2)	113.1(7)
C(33)-As(3)-B(2)	101.7(10)
C(33)-As(3)-C(31)	100.2(9)
C(35)-As(4)-Nb(2)	120.7(7)
C(37)-As(4)-Nb(2)	119.5(6)
C(37)-As(4)-C(35)	98.5(9)
H'B-As(4)-C(35)	89(5)
H'B-As(4)-C(37)	95(5)
H'B-As(4)-Nb(2)	127(5)

to the corresponding values (1.52(13) and 1.31(13) Å) found in $[(CO)(PEt_3)_2(H)(Cl)Ir\text{-}(\mu\text{-}AsH_2)\text{-}RuCl_2(MeC_6H_4CHMe_2)]$ [10,11]. The As–C bond range [1.97(2)–2.00(2) Å] in **6** is larger than the As–C bonds found in the four-coordinated arsenic compounds (1.903(16) Å) but is close to the corresponding value found in the tri-coordinated arsenic compounds (1.963(17) Å) [29]. Also the B–As bond, at 2.07(2) Å, appears longer than the As–C bond range [1.97(2)–2.00(2)]. This may be attributed to the high As *p*-orbital character in the As–B and As–C bonds and parallels the short Nb–$AsEt_2BH_3$ bond. The As–Nb–As bond angle of 85.38(8)° is close to the typical value found for the d^2 niobocene $[Cp_2NbLX]$ (L = two-electron donor, X = one-electron donor) and is consistent with the calculated value [30].

2.3. Arsenic–phosphorus mixed derivative

Bonnet et al. [31,32], Kubicki et al. [33] and Barre et al. [34] developed a convenient method for the synthesis of complexes of the type $[Cp_2Nb(PR_2)(PR'_3)]$ by the reaction of $[Cp_2NbH(PR'_3)]$ with $ClPR_2$ and subsequent deprotonation of the resulting complex $[Cp_2Nb(HPR_2)(PR'_3)]Cl$. This approach was also promising for the synthesis of a mixed arsenic–phosphorus derivative. $BrAsEt_2$ reacts immediately with $[Cp_2NbH(HP^{i-}Pr_2)]$ to give an orange precipitate of $[Cp_2Nb(HAsEt_2)(HP^{i-}Pr_2)]Br$ (**9**) (Scheme 4). Complex **9** was characterized by NMR and IR spectroscopy. Complex **9** has two acidic centers: the P–H and As–H bonds. The action of $NaN(SiMe_3)_2$ on **9** results in the phosphinoarsenido complex $[Cp_2Nb(AsEt_2)(HPPr_2^{-i})]$ (**10**), consistent with the lower stability of the As–H bond as compared with the P–H bond. The possible isomeric $[Cp_2Nb(HAsEt_2)(P^{i-}Pr_2)]$ or $[Cp_2Nb(AsEt_2)(P^{i-}Pr_2)H]$ are not formed. This formulation of complex **10** is supported by the spectroscopic data. Thus the IR spectrum of **10** exhibits the P–H stretching band at 2318 cm^{-1}. Also the phosphorus signal in the ^{31}P NMR spectrum (64.2 ppm) is characteristic for a coordinated phosphino group rather than for a phosphido ligand PR_2. Finally, the ^1H NMR spectrum of **10** (benzene-d_6) does not display a signal for the hydride ligand: the P–H signal at 4.06 ppm coupled to the phosphorus nucleus ($^1J_{P-H}$ = 302.1 Hz) was observed. Complex **10** has three reactive centers (P–H bond, niobium and arsenic lone pairs) and thus is amenable to further transformation. For example, it can be deprotonated to give the ionic complex $[Cp_2Nb(AsEt_2)(PPr_2^{-i})]^-$ which is a promising metalloligand for the synthesis of heterobimetallic complexes. This chemistry is currently under investigation.

3. Experimental section

All manipulations were carried out using conventional Schlenck techniques. Solvents were dried over sodium benzophenone ketyle. NMR spectra were recorded on a Varian VXR-400 spectrometer (^1H, 400.0 MHz, ^{13}C, 100.4 MHz, ^{11}B, 128.3 MHz, ^{31}P 161.9 MHz). ^1H NMR spectra were referenced to the residual protiosolvent (relatively to $SiMe_4$). ^{31}P NMR spectra were referenced to 85% H_3PO_4 as external standard. IR spectra were obtained in Nujol with a Perkin–Elmer series spectrometer. Mass-spectra (EI) were obtained with a CH7 Varian MAT spectrometer.

3.1. Preparation of $Cp_2NbH_2(HAsEt_2)Br$ (1a)

Excess $BrAsEt_2$ (1 ml, 8.12 mmol) was added dropwise to 100 ml of a toluene solution of Cp_2NbH_3 (1.46 g, 6.46 mmol). A white voluminous precipitate was formed immediately. After filtration, this powder was washed with an additional 50 ml toluene and dried in vacuo. Yield 2.34 g (5.34 mmol, 82.6%). IR (Nujol): ν_{As-H} = 2180 cm^{-1}, ν_{Nb-H} = 1700 cm^{-1}. ^1H NMR (methanol-d_4): δ 5.75 (s, 10, Cp), 2.12 and 1.86 (m, 4, CH_2), 1.35 (t, $^3J_{H-H}$ = 7.6 Hz, 6, CH_3), −2.15 (s, 2, Nb–H). ^{13}C NMR: 90.61 (s, Cp), 22.05 (s, CH_2), 15.38 (s, CH_3).

3.2. Preparation of $Cp_2NbH_2(HAsMe_2)Br$ (1b)

1.2 ml of $BrAsMe_2$ were added dropwise to 100 ml of a toluene solution of Cp_2NbH_3 (1.55 g, 6.86 mmol). A white voluminous precipitate was formed immediately. After filtration, this powder was washed with an additional 100 ml toluene and dried in vacuo. Yield 2.17 g (5.27 mmol, 76.8%). IR (Nujol) ν_{As-H} = 2160 cm^{-1}, ν_{Nb-H} = 1700 cm^{-1}. ^1H NMR (methanol-d_4/D_2O = 2:5): δ 5.65 (s, 10, Cp), 1.47 (s, 6, CH_3), −3.81 (s, 2, Nb–H). ^{13}C NMR: 92.15 (s, Cp), 10.21 (s, CH_3).

3.3. Preparation of $Cp_2NbH_2AsEt_2$ (2a)

2.34 g (5.34 mmol) of **6** were suspended in 100 ml of diethyl ether. 1.01 g of $NaN(SiMe_3)_2$ in 50 ml of ether were added, and the mixture thus obtained was stirred for 1 h, until the precipitate was almost completely dissolved. Volatiles were removed in vacuo, 50 ml of toluene added and the resulting yellow solution filtered. Solvent was removed in vacuo yielding 1.77 g (4.95 mmol, 93%) of a yellow crystalline substance. IR (Nujol): ν_{Nb-H} = 1725 cm^{-1}. ^1H NMR (benzene-d_6): δ 4.62 (s, 10, Cp), 1.75 (m, 2, CH_2), 1.48 (m, 8, CH_2 and CH_3), −2.50 (s, 2, Nb–H). ^{13}C NMR: 93.29 (s, Cp), 19.58 (s, CH_2), 11.24 (s, CH_3). MS(EI): 356(M);

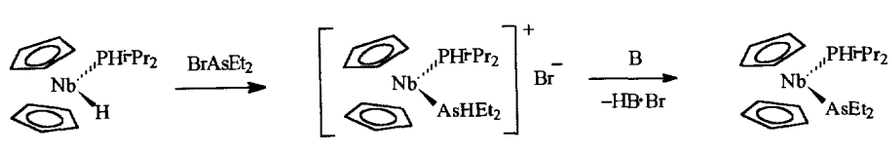

9 **10**

Scheme 4.

HRMS: Calcd. 356.9869 for NbAsC13/1H20, Found: 356.9878.

3.4. Deprotonation of $Cp_2NbH_2(HAsMe_2)Br$ (1b) to give $Cp_2NbH_2AsMe_2$ (2b)

0.86 g of NaOH in 30 ml of water were added to a suspension of 1.97 g (4.79 mmol) of **1b** in 20 ml of toluene. The reaction occurred immediately, affording a brown-green solution. The mixture was stirred for 10 min. Then the organic phase was decanted and the solvent was removed in vacuo to give 0.835 g of a green powder. The NMR spectra revealed a 1:1 mixture of **2b** and Cp_2NbH_3. Attempted recrystallization of this mixture from ether into pure components failed. Also **2b** does not dissolve significantly in *n*-hexane. ^{1}H NMR (benzene-d_6) data for **2b**: δ 4.69 (s, 10, Cp), 1.51 (s, 6, CH_3), −2.34 (s, 2, Nb–H). ^{13}C NMR: 90.92 (s, Cp), 14.20 (s, CH_3).

3.5. Preparation of $Cp_2NbH_2(AsEt_2AsEt_2)Br$ (5)

0.35 ml of Et_2AsBr were added dropwise to a solution of 0.80 g (2.24 mmol) of **7** in 100 ml of toluene. After some minutes an orange powder precipitated. It was filtered, washed with ether and dried in vacuo. Yield 1.00 g (1.54 mmol, 68.6%). IR (KBr) ν_{Nb-H} = 1624 cm^{-1}. ^{1}H NMR (methanol-d_4): δ 5.74 (s, 10, Cp), 2.09 (m, 2, Nb–As–CH_2), 1.87 (m, 6, Nb–As–CH_2 and As–As–CH_2), 1.29 (t, $^3J_{H-H}$ = 7.5 Hz, 6, CH_3), 1.28 (t, $^3J_{H-H}$ = 7.7 Hz, 6, CH_3), −1.68 (s, 2, As–H). ^{13}C NMR: 93.61 (s, Cp), 20.75 and 17.22 (s, CH_2), 12.24 and 10.11 (s, CH_3).

3.6. Preparation of $Cp_2Nb(HAsEt_2)(H_3BAsEt_2)$ (6)

6 ml of NEt_3 were added to solution of 1.77 g (7.44 mmol) of Cp_2NbBH_4 in 100 ml of toluene. 1.815 g of $(AsEt_2)_2$ were added to the mixture with vigorous stirring. The mixture was stirred for 7 h. The solution was filtered and all volatiles were removed in vacuo. The resulting red oil was dissolved in hexane and left at −26°C. A mixture of big red crystals of $Cp_2Nb(HAsEt_2)(H_3BAsEt_2)$ and small yellow crystals of $Cp_2NbH_2(H_3BAsEt_2)$ was formed. The cold solution was decanted and crystals were dried in vacuo. Crystals of $Cp_2Nb(HAsEt_2)(H_3BAsEt_2)$ were manually separated. IR (Nujol) ν_{As-H} = 2093 cm^{-1}. ^{1}H NMR (benzene-d_6): δ 4.46 (s, 10, Cp), 1.64 (m, 3, BH_3), 1.53 and 1.15 (m, 4, CH_2), 1.36–1.30 (m, 10, Et), 0.89 (t, $^3J_{H-H}$ = 7.65 Hz, 6, CH_3). ^{13}C NMR: 88.07 (s, Cp), 19.78 (s), 16.52 (s), 12.74 (s), 11.48 (s). ^{11}B NMR: −31.46. MS(EI): 134.0 ($HAsEt_2$), 144.0 (H_2BAsEt_2), 266.0 $(AsEt_2)_2$, 356.0 ($Cp_2NbH_2AsEt_2$), 502.0 ($Cp_2Nb(AsEt_2)_2(BH_2)$). HRMS: Calcd. 502.0130 for NbAs2C17/1H32B1/0, Found: 502.0163.

3.7. Preparation of $[Cp_2Nb(HP^{i-}Pr_2)(HAsEt_2)]Br$ (9)

0.95 ml of Et_2AsBr were added dropwise to a solution of 1.267 g (3.70 mmol) of $Cp_2NbH(HPPr^i_2)$ in 100 ml of ether. Immediate precipitation of an orange powder occurred. The precipitate was filtered, washed with 100 ml of diethyl ether and dried in vacuo. Yield 1.965 g (3.54 mmol, 96%). IR (KBr) ν_{P-H} = 2318 cm^{-1}, ν_{As-H} = 2093 cm^{-1}. ^{1}H NMR (acetone-d_6): δ 5.25 (d, J_{P-H} = 2.0 Hz, 10, Cp), 3.85 (d, $^1J_{P-H}$ = 169.5 Hz, P–H), 2.35 (m, 2, CH), 1.25–1.04 (m, 22, Me(Pr) and Et). ^{13}C NMR: 90.99 (s, Cp), 23.35, 21.58. ^{31}P{^{1}H} NMR: 50.4 ppm. Anal. Calcd. for $C_{20}H_{36}AsBrNb$: 14.39, Br. Found: 13.88, Br.

3.8. Preparation of $Cp_2Nb(HP^{i-}Pr_2)(AsEt_2)$ (10)

1.863 g (3.35 mmol) of $[Cp_2Nb(HPPr^i_2)(HAsEt_2)]Br$ were suspended in 100 ml of toluene.). 25 ml of 0.4 M NaOH (aq) were added and the mixture thus obtained was stirred for 90 min. The colour rapidly turned dark-red. The toluene solution was decanted and volatiles were removed in vacuo. The resulting material was recrystallized from *n*-hexane. Yield: 1.33 g (2.81 mmol, 84%). IR (Nujol) ν_{P-H} = 2318 cm^{-1}. ^{1}H NMR (benzene-d_6): δ 4.39 (d, J_{P-H} = 2.0 Hz, 10, Cp), 4.06 (dt, $^1J_{P-H}$ = 302.1 Hz and $^3J_{H-H}$ = 2.7 Hz, 1, P–H), 2.05

Table 2
Crystal data and structure refinement for **6**

Empirical formula	$C_{18}H_{34}As_2BNb$
Formula weight	504.01
Temperature, K	173(2)
Wavelength, Å	MoK$_\alpha$, 0.71073
Crystal	red needle
Space group	*P*-1
Unit cell dimensions	
a, Å	9.651(5)
b, Å	14.861(8)
c, Å	16.330(9)
α, °	63.44(3)
β, °	89.77(3)
γ, °	89.75(3)
Volume	2094.9(19)
Z	4
Density (calculated) Mg/m^3	1.598
Absorption coefficient μ, mm^{-1}	3.705
F(000)	899
Range for data collection, (°)	$2.11 < \theta < 23.00$
Reflections collected	5745
Independent reflections	5504 (R_{int} = 0.0736)
Absorption correction	ψ scans
Max. and min. transmission factors	0.8635 and 0.5951
Refinement	Full matrix least-squares on F^2
Data/restraints/parameters	5502/14/485
Goodness-of-fit on F^2	1.075
Final *R* indices [$I > 2\sigma(I)$]	$R1$ = 0.0721, $wR2$ = 0.1891
R indices (all data)	$R1$ = 0.0868, $wR2$ = 0.1982
Largest diff. peak and hole, eÅ^{-3}	1.52, −1.68

(m, 2, CH), 1.57–1.43 (m, 10, Et), 0.93 (d, $^3J_{H-H}$ = 7.12 Hz, 3, CH_3), 0.89 (d, $^3J_{H-H}$ = 7.14 Hz, 3, CH_3), 0.82 (d, $^3J_{H-H}$ = 7.22 Hz, 3, CH_3), 0.77 (d, $^3J_{H-H}$ = 7.14 Hz, 3, CH_3). ^{13}C NMR: 87.52 (s, Cp), 26.50 (d, $^1J_{P-H}$ = 17.0 Hz, P–C), 23.48, 21.09, 19.93, 17.89. $^{31}P\{^1H\}$ NMR: 64.2 ppm.

3.9. X-ray structure determination of 6

Red crystals of **6** were grown from diethyl ether solution. A crystal was covered with RS3000 perfluoropolyether oil and mounted on an Enraf Nonius CAD-4 diffractometer at −100°C. Crystal data are given in Table 2. The unit cell parameters were determined using 25 accurately centered reflections. Two standard reflections were measured every 2 h. The structure amplitudes for 5504 independent reflections were obtained after the usual Lorentz and polarization corrections. The structure was solved by direct methods [35] and refined by full-matrix least squares procedures [36], using $(|F_o^2| - |F_c^2|)^2$ as the function minimised. Attempted solution in the monoclinic space groups failed. A relationship in the coordinates of the heavy atoms was noted and the lattice was transformed into the monoclinic system (Table 3). However, further refinement in the monoclinic system gave large R factor (> 0.25) and unrealistic bond lengths and angles. During the refinement we found that the crystal was a monoclinic twin: this was taken into account using the TWIN instruction of the SHELXTL package [36] and the twin matrix (100)(0 − 10)(00 − 1). In one of the independent molecules one methyl group was treated as disordered (atoms C(18) and C(18′) with the occupancies 0.63 and 0.37, respectively). In the final cycles of refinement, the disordered atoms were refined with isotropic temperature parameters and all other non-hydrogen atoms were refined with anisotropic temperature parameters. Hydrogen atoms were calculated geometrically and were refined using a riding model, the hydrogens bound to the arsenic atoms were refined isotropically. The residual electron density extreme (1.58, −1.63 e.Å^{-3}) both lay within 0.9 Å of the niobium and were therefore of no chemical significance.

Table 3
Atomic coordinates [×10^4] and equivalent isotropic displacement parameters [Å^2 × 10^3] for **6**

	x	y	z	U_{eq}
Nb(1)	454(2)	9799(1)	2772(1)	31(1)
As(1)	1062(2)	11574(1)	1368(1)	34(1)
As(2)	−2042(2)	10095(2)	2071(1)	43(1)
B(1)	1593(26)	11710(17)	90(13)	47(6)
C(1)	−788(23)	10329(19)	3764(14)	58(6)
C(2)	−455(24)	9343(15)	4264(12)	49(5)
C(3)	1008(31)	9359(19)	4289(13)	73(8)
C(4)	1444(30)	10393(23)	3756(16)	77(8)
C(5)	261(29)	10924(16)	3465(13)	59(6)
C(6)	217(26)	8393(14)	2442(15)	61(6)
C(7)	1126(23)	8104(13)	3188(12)	47(5)
C(8)	2317(22)	8661(15)	2909(13)	53(5)
C(9)	2175(22)	9332(14)	1996(13)	47(5)
C(10)	913(28)	9196(16)	1670(13)	62(7)
C(11)	2608(19)	12300(14)	1634(12)	42(4)
C(12)	3912(25)	11701(18)	1810(14)	71(7)
C(13)	−461(20)	12558(12)	1092(14)	49(5)
C(14)	−65(26)	13662(14)	510(13)	63(6)
C(15)	−2209(25)	10319(20)	791(17)	80(8)
C(16)	−3595(27)	10728(23)	367(17)	98(10)
C(17)	−3543(28)	9092(25)	2570(18)	120(12)
C(18)	−3878(47)	8932(42)	3520(22)	81(16)
C(18′)	−3439(65)	8349(42)	3556(23)	52(22)
Nb(2)	4941(2)	5487(1)	2233(1)	39(1)
As(3)	5958(2)	3682(1)	3401(1)	38(1)
As(4)	2624(2)	4852(1)	3171(1)	39(1)
B(2)	6832(31)	3428(18)	4641(16)	63(7)
C(21)	5599(25)	5865(15)	3438(13)	55(6)
C(22)	6665(26)	5969(17)	2924(17)	65(6)
C(23)	6465(32)	6837(19)	2038(16)	77(7)
C(24)	5176(33)	7125(18)	2081(18)	83(8)
C(25)	4596(25)	6597(18)	2929(20)	73(7)
C(26)	3596(29)	5077(20)	1189(13)	76(8)
C(27)	4767(27)	4540(16)	1357(13)	56(6)
C(28)	5919(28)	5249(20)	1023(14)	73(7)
C(29)	5353(28)	6227(18)	632(13)	65(6)
C(30)	3897(32)	6126(16)	751(13)	69(7)
C(31)	4561(24)	2561(13)	3731(13)	54(6)
C(32)	5213(28)	1521(15)	4187(18)	85(8)
C(33)	7443(25)	3191(18)	2854(17)	72(7)
C(34)	8764(23)	3826(19)	2698(17)	74(7)
C(35)	1020(21)	5753(16)	2916(17)	64(6)
C(36)	690(25)	6355(19)	1920(17)	81(8)
C(37)	2656(19)	4323(17)	4504(12)	55(6)
C(38)	1394(26)	3767(21)	5000(16)	88(8)

U_{eq} is defined as one third of the trace of the orthogonalized [U_{ij}] tensor.

Acknowledgements

G.I.N. and D.A.L. thank the Russian Fund for Basic Research for financial support.

References

[1] G. Huttner, K. Evertz, Acc. Chem. Res. 19 (1986) 406.
[2] A.-J. Dimaio, A.L. Rheingold, Chem. Rev. 90 (1990) 169.
[3] O.J. Scherer, Angew. Chem. 102 (1990) 1137.
[4] L. Weber, D. Bungardt, R. Boese, D. Blaser, Chem. Ber. 121 (1988) 1033.
[5] F. Cecconi, C.A. Ghilardi, S. Midollini, S. Monet, A. Orlandini, G.J. Scapacci, J. Chem. Soc., Chem. Comm. (1990) 1583.
[6] M.H. Chisholm, J.C. Huffman, J.W. Pasterczyk, Inorg. Chem. 26 (1987) 3781.
[7] E.W. Abel, S.R. Allen, P.A. Bates, M.B. Hursthouse, B. Khandelwal, J. Chem. Soc., Chem. Comm. (1987) 983.
[8] W. Malisch, M. Kuhn, W. Albert, H. Rossner, Chem. Ber. 113 (1980) 3318.
[9] H. Burger, H.J. Neese, Inorg. Nucl. Chem. Lett. 6 (1970) 299.
[10] H.-A. Kaul, D. Greissinger, M. Luksza, W. Malisch, J. Organomet. Chem. 228 (1982) 229.

[11] E.A.V. Ebsworth, R.O. Gould, R.A. Mayo, M. Walkinshaw, J. Chem. Soc., Dalton Trans. (1987) 2831.
[12] H. Burger, H.J. Neese, Z. Anorg. All. Chem. 370 (1969) 275.
[13] S.E. Wade, M.G.H. Wallbridge, G.R. Willey, J. Organomet. Chem. 267 (1984) 271.
[14] E. Hey-Hawkins, F. Linderberg, Organometallics 13 (1994) 4643.
[15] F. Linderberg, U. Müller, A. Pilz, J. Sieler, E. Hey-Hawkins, Z. Anorg. Allg. Chem. 622 (1996) 683.
[16] M. Luksza, S. Himmel, W. Malisch, Angew. Chem. Int. Ed. Engl. 22 (1983) 416.
[17] K.A. Mahmoud, A. Rest, M. Luksza, K. Jörg, W. Malisch, Organometallics 3 (1984) 501.
[18] L. Weber, D. Bungardt, R. Boese, D. Bläser, Chem. Ber. 121 (1988) 1033.
[19] H. Köpf, U. Görges, Z. Naturforsch. 31 (1981) 1205.
[20] P. Mercando, A.-J. Dimaio, A.L. Rheingold, Angew. Chem. 99 (1987) 416.
[21] G.I. Nikonov, D.A. Lemenovskii, J. Lorberth, Organometallics 13 (1994) 3127.
[22] G.I. Nikonov, L.G. Kuzmina, P. Mountford, D.A. Lemenovskii, Organometallics 14 (1995) 3588.
[23] G.I. Nikonov, D.A. Lemenovskii, J. Lorberth, Polyhedron 15 (1996) 1565.
[24] G.I. Nikonov, L.G. Kuzmina, Yu.K. Grishin, D.A. Lemenovskii, N.B. Kazennova, accepted for publication in J. Organomet. Chem.
[25] G.I. Nikonov, L.G. Kuzmina, J.A.K. Howard, Organometallics 16 (1997) 3723.
[26] G.I. Nikonov, K. Harms, J. Lorberth, D.A. Lemenovskii, Inorg. Chem. 34 (1995) 2461.
[27] D.A. Lemenovskii, I.E. Nifant'ev, E.G. Perevalova, T.V. Timofeeva, Yu.L. Slovohotov, Yu.T. Struchkov, J. Organomet. Chem. 342 (1986) 31.
[28] H. Nöth, B. Wrackmeyer, Nuclear Resonance Spectroscopy of Boron Compounds, Springer-Verlag, Berlin, 1977, p. 94.
[29] F.H. Allen, O. Kennard, D.G. Watson, L. Brammer, A.G. Orpen, R. Taylor, J. Chem. Soc. Perkin Trans. 2 (1987) S1.
[30] J.W. Lauher, R. Hoffmann, J. Am. Chem. Soc. 98 (1976) 1729.
[31] G. Bonnet, O. Lavastre, J.-C. Leblanc, C. Moise, New. J. Chem. 12 (1988) 551.
[32] G. Bonnet, M.M. Kubicki, C. Moise, R. Lazzaroni, P. Salvador, G. Vitulli, Organometallics 11 (1992) 964.
[33] M.M. Kubicki, R. Kergoat, M. Cariou, J.E. Guerchais, P. L'Haridon, J. Organomet. Chem. 322 (1987) 357.
[34] C. Barre, M.M. Kubicki, J.-C. Leblanc, C. Moise, Inorg. Chem. 29 (1990) 5244.
[35] G.M. Sheldrick, SHELXS-86, Program for Crystal Structure Solution, Acta Cryst. 146 (1990) 467.
[36] G.M. Sheldrick, SHELXTL, 1996. Program for Crystal Structure Refinement, Universität Göttingen.